PARTS LIST FOR AZ-1-275CF

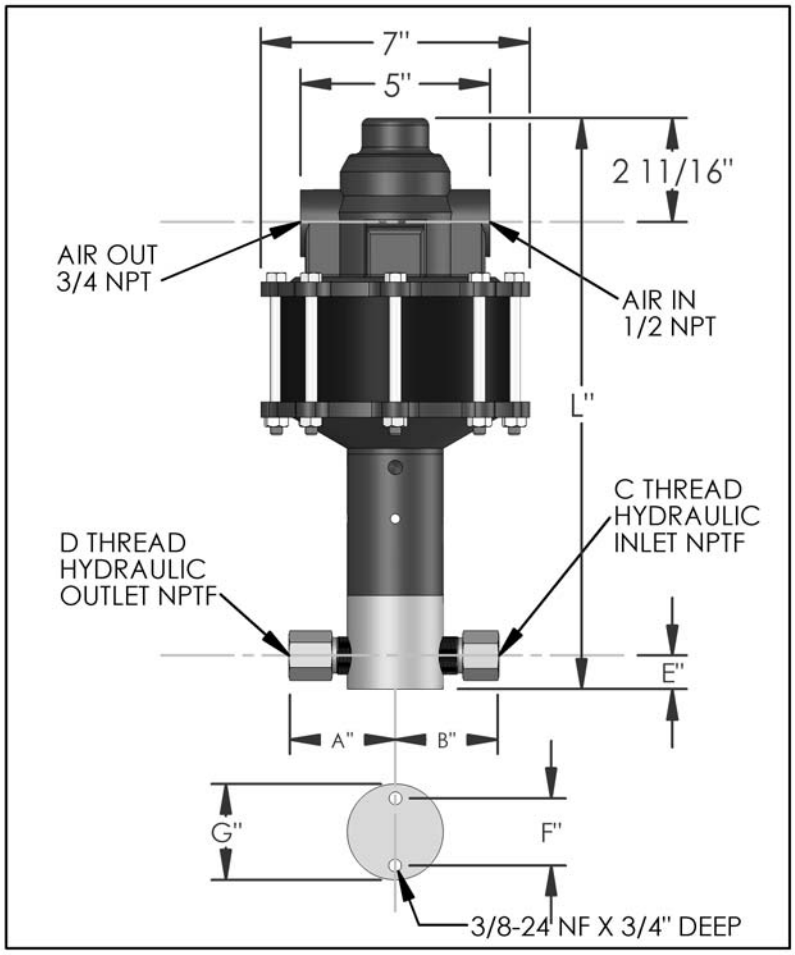

DIMENSIONS (ins./mm)							
L	A	B	C	D	E	F	G
14-15/16	2-1/2	2-5/16	3/8	3/8	7/8	1-3/4	2-1/2
379	64	59			22	44	64

HYD. PISTON DIA. (ins.)	0.313
HYD. PISTON AREA (ins.)	0.0769
VOLUME PER STROKE (ci.)	0.096

Pump may be mounted in any position. (vertical Prefered) if mounted in an inverted position, drill a 1/16" hole in head or install a drain cock to release any fluid that may accumulate.

AIR PRESSURE-PSI	10	20	30	40	50	60	70	80	90	100
HYDRAULIC PRESSURE-PSI	2,250	4,000	7,750	10,500	13,500	16,250	18,750	21,500	24,500	27,500

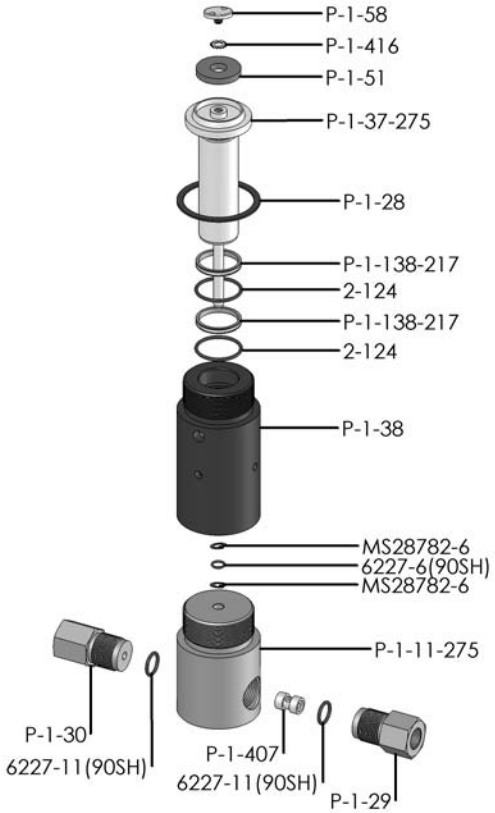

EXPLODED VIEW OF HYDRAULIC ASSEMBLY

AIR PSI		60	80	100	APPROXIMATE RATE OF DISCHARGE-CIPM
HYDRAULIC PRESSURE-PSI	0	36	41	44	
	3,000	23	27	29	
	3,500				
	4,000				
	4,500				
	5,000				
	6,000	20	23	25	
	7,000				
	8,000				
	9,000	18	21	24	
	10,000				
	12,500	15	19	21	
	15,000	12	18	20	
	20,000	0	13	18	
	25,000		0	13	
	30,000			0	

AZ-1 MODEL PUMP / PARTS LIST

EXPLODED VIEW OF AIR MOTOR

P-1-113

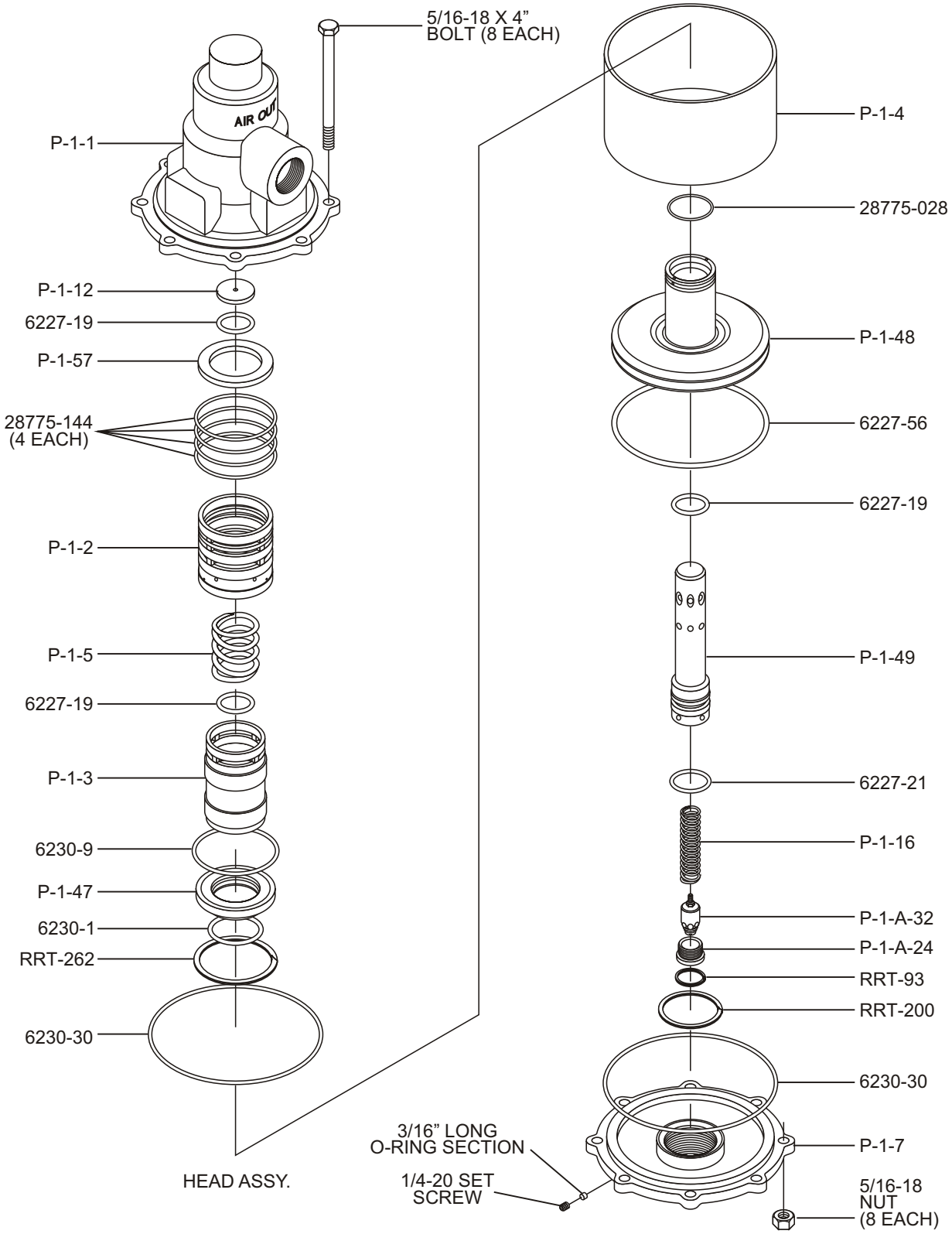

AZ HYDRAULIC ENGINEERING, INC.

Kingman, Arizona 86402
Tel: 928.757.1400 Fax: 928.757.1004
Email: sales@azpump.com
Website: www.azpump.com